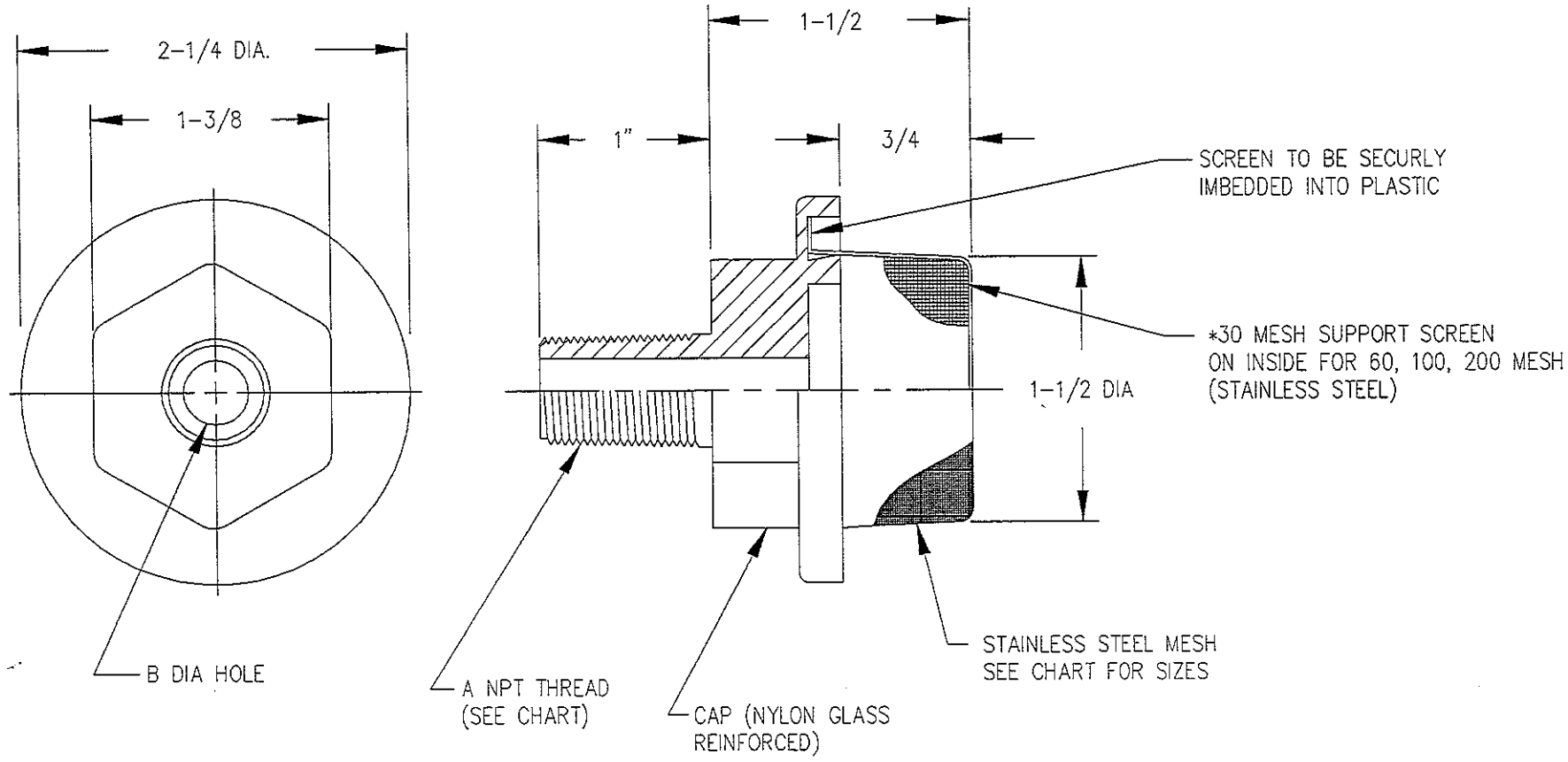

CHART

MODEL	A NPT SIZE	B HOLE DIA	SCREEN AREA IN^2	MESH SIZE
M3	3/8	3/8	6.5	4
				6
M4	1/2	1/2		8
				10
M6	3/4	3/4		20
				30
				40
				60/30*
				100/30*
				200/30*

MODEL EXAMPLE: M4-100/30

LETTER	REVISION	BY	DATE

DO NOT SCALE DRAWING

UNLESS OTHERWISE SPECIFIED
DIMENSIONS ARE IN INCHES
TOLERANCES

3 PLACE DEC.	2 PLACE DEC.	OTHER	ANGULAR
±	±	± 1/16	±

MACHINED SURFACES ✓

DEBURR ALL EDGES .002 TO .007
FILLETS .01 TO .02 RADIUS

DISC FILE NO. 18F, 73F

ASS'Y REF.

DR. C DAY

DATE 09-28-90

CH.
DATE

SCALE FULL

MATERIAL

FLOW EZY FILTERS, INC.

ANN ARBOR, MICHIGAN 48106

TITLE

SUCTION SCREEN

ITEM NO.

SHEET OF

DRAWING NO. 11149-14

REV.