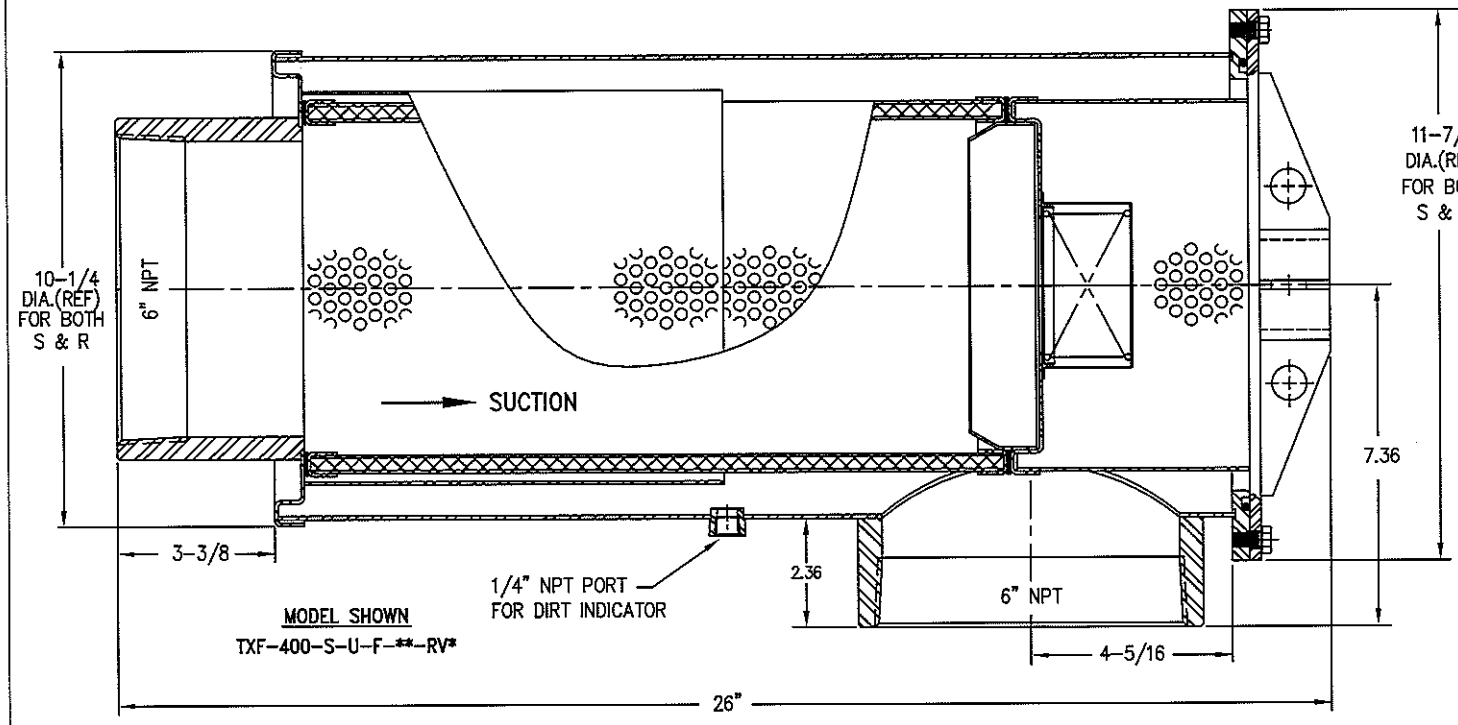

MODEL SHOWN

TXF-400-S-U-F-**-RV*

REPLACEMENT ELEMENTS

MICRON	PART #
595	6352-30M
238	6352
149	6352-01
74	6352-02
40	6352-03
25	6352-04
40A	6352-05

TECHNICAL NOTES:

RATED TO 400 GPM
PRESSURE RATING = 100 PSI
CARBON STEEL HOUSING
WELDED AND PAINTED BLACK
ELEMENT SCREEN AREA
= 1600 SQ. INCHES

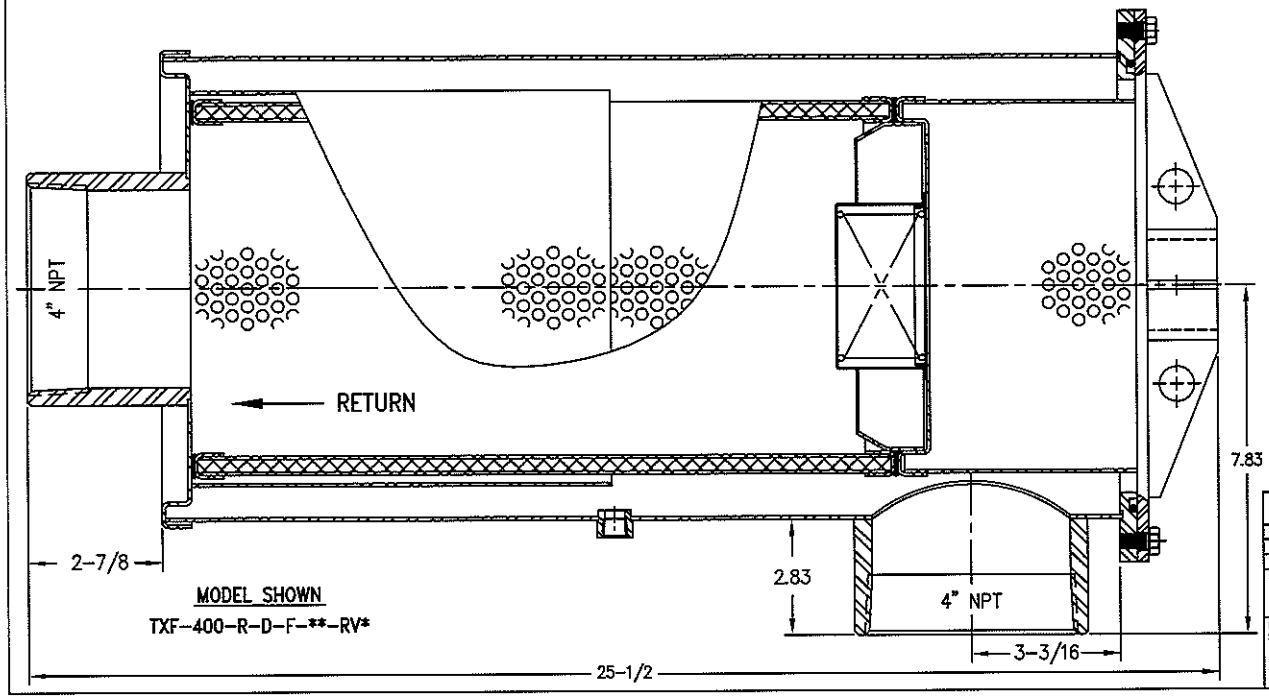

MODEL SHOWN

TXF-400-R-D-F-**-RV*

HOW TO ORDER

TXF400-S-U-F-74-F3-RV3-M-SM

FILTER MODEL

USAGE
SUCTION = S
RETURN = R

FLOW DIRECTION
UP = U
DOWN = D

PORT SYLE
FEMALE NPT COUPLING = F

ELEMENT MICRON RATING
595, 238, 149, 74, 40, 25 — STAINLESS STEEL WIRE CLOTH
40A — SYNTHETIC MEDIA

DIRT INDICATOR
NO SYMBOL = NO INDICATOR
S = FOR SUCTION LINE
SM = FOR SUCTION LINE WITH MEMORY
R = FOR RETURN LINE

MAGNETS
NO SYMBOL = NO MAGNETS
M = WITH MAGNETS

BYPASS VALVE
RV3 = 3 PSI
RV5 = 5 PSI
RV15 = 15 PSI

SEALS
NO SYMBOL = BUNA N
F3 = VITON

LETTER	REVISION	BY	DATE

DO NOT SCALE DRAWING	DISC FILE DB ZIP-1	MATERIAL	TITLE TXF-400 FILTER OUTLINE
UNLESS OTHERWISE SPECIFIED DIMENSIONS ARE IN INCHES TOLERANCES	ASS'Y REF.	FLOW EZY FILTERS, INC. ANN ARBOR, MICHIGAN 48106	
3 PLACE DEC. ± / 2 PLACE DEC. ± / OTHER ± / ANGULAR ±	DR. D BALL DATE 07-24-06		ITEM NO. / SHEET OF
MACHINED SURFACES ✓	DEBURR ALL EDGES .002 TO .007 FILLETS .01 TO .02 RADIUS	CH. DATE	DRAWING NO. 10069-CR / REV.
	SCALE NONE		